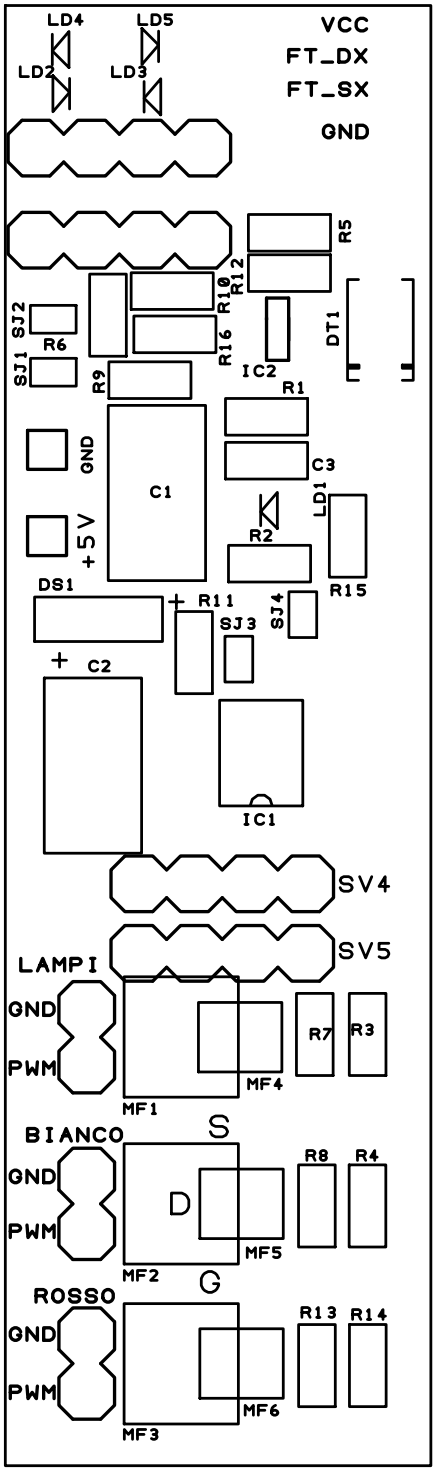
LD4
LD5
LD2
LD3
VCC
FT_DX
FT_SX
GND
R5
R12
R10
R16
SJ2
R6
SJ1
R9
IC2
DT1
R1
GND
C1
C3
LD1
+5V
R2
R15
DS1
R11
SJ3
SJ4
C2
IC1
SV4
SV5
LAMPI
GND
PWM
MF1
MF4
R7
R3
BIANCO
S
GND
D
PWM
MF2
MF5
R8
R4
G
ROSSO
GND
PWM
MF3
MF6
R13
R14